# NGW 型两级行星减速器

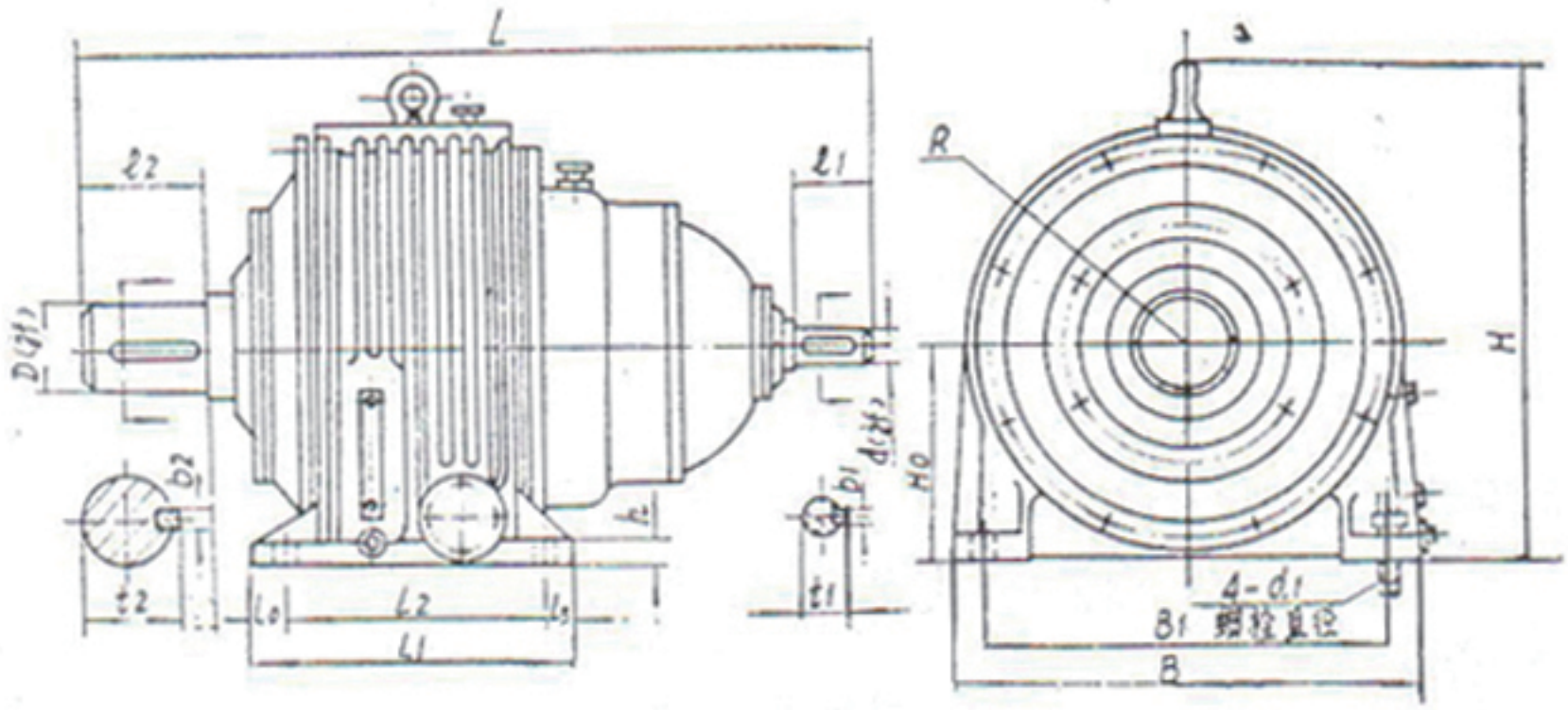


(mm)

| 机座号 | 型号规格 | 公称传动比 io | 外形及中心高 | | | | | 轴伸 | | | | | | | | 地脚尺寸 | | | | | | | 质量 kg |
|---|---|---|---|---|---|---|---|---|---|---|---|---|---|---|---|---|---|---|---|---|---|---|---|
| | | | L | B | H | $H_0$ | R | d | D | $l_1$ | $l_2$ | $t_1$ | $b_1$ | $t_2$ | $b_2$ | $L_1$ | $L_2$ | $L_3$ | $L_0$ | $B_1$ | $d_1$ | h | |
| | | | mm | | | | | | | | | | | | | | | | | | | | |
| 4 | NGW 42 | 14—22.5 | 687 | 380 | 425.5 | 180 | 180 | 35 | 80 | 55 | 105 | 38.5 | 10 | 87 | 24 | 290 | 230 | 30 | 72 | 320 | M24 | 30 | 128 |
| | | 25—160 | 687 | | | | | 30 | | 55 | | 33 | 8 | | | | | | | | | | 130 |
| 5 | NGW 52 | 14—22.5 | 767 | 420 | 463.5 | 200 | 200 | 40 | 90 | 70 | 115 | 43.5 | 12 | 97 | 24 | 310 | 250 | 30 | 80.5 | 360 | M24 | 35 | 244 |
| | | 25—160 | 752 | | | | | 35 | | 55 | | 38.5 | 10 | | | | | | | | | | 241 |
| 6 | NGW 62 | 14—22.5 | 805.5 | 475 | 524 | 225 | 225 | 45 | 100 | 70 | 125 | 49 | 14 | 108 | 28 | 360 | 290 | 35 | 67.5 | 405 | M30 | 40 | 291 |
| | | 25—160 | 805.5 | | | | | 40 | | 70 | | 43.5 | 12 | | | | | | | | | | 279 |
| 7 | NGW 72 | 14—22.5 | 890 | 535 | 574 | 250 | 250 | 50 | 110 | 85 | 140 | 55 | 16 | 119 | 32 | 375 | 305 | 35 | 80 | 465 | M30 | 40 | 350 |
| | | 25—160 | 875 | | | | | 45 | | 70 | | 49 | 14 | | | | | | | | | | 350 |
| 8 | NGW 82 | 14—22.5 | 976.5 | 590 | 634 | 280 | 280 | 55 | 120 | 85 | 160 | 60 | 16 | 129 | 32 | 440 | 350 | 45 | 86 | 510 | M36 | 45 | 488 |
| | | 25—160 | 976.5 | | | | | 50 | | 85 | | 55 | 16 | | | | | | | | | | 460 |
| 9 | NGW 92 | 14—22.5 | 1040 | 660 | 721 | 315 | 315 | 60 | 130 | 105 | 165 | 65.5 | 18 | 140 | 36 | 475 | 385 | 45 | 70.5 | 570 | M36 | 45 | 607 |
| | | 25—160 | 1020 | | | | | 55 | | 85 | | 60 | 16 | | | | | | | | | | 577 |
| 10 | GW 102 | 14—22.5 | 1144 | 745 | 800 | 355 | 355 | 65 | 150 | 105 | 200 | 70.5 | 18 | 161 | 40 | 525 | 425 | 50 | 78 | 645 | M42 | 50 | 895 |
| | | 25—160 | 1144 | | | | | 60 | | 105 | | 65.5 | 18 | | | | | | | | | | 895 |
| 11 | NGW 112 | 14—22.5 | 1222 | 840 | 891 | 400 | 400 | 75 | 170 | 115 | 200 | 81 | 20 | 181 | 40 | 580 | 480 | 50 | 73 | 740 | M42 | 55 | 1120 |
| | | 25—160 | 1212 | | | | | 65 | | 105 | | 70.5 | 18 | | | | | | | | | | 1075 |
| 12 | NGW 122 | 14—22.5 | 1385 | 950 | 1013 | 450 | 455 | 85 | 190 | 125 | 240 | 92 | 24 | 202 | 45 | 680 | 560 | 60 | 73 | 820 | M48 | 60 | 1733 |
| | | 25—160 | 1375 | | | | | 75 | | 115 | | 81 | 20 | | | | | | | | | | 1539 |